IN1 COPPER 0.5OZ 102_73189_1.gm07 .G2L

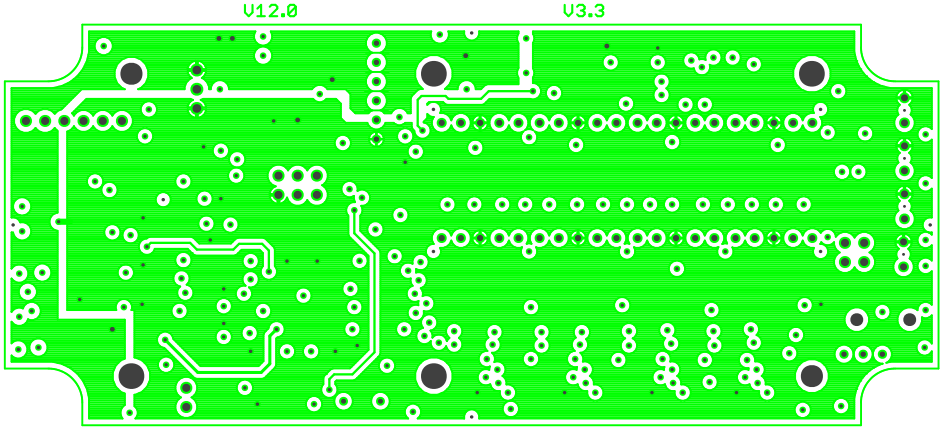

NO CHANGES TO ARTWORK FROM REV 0