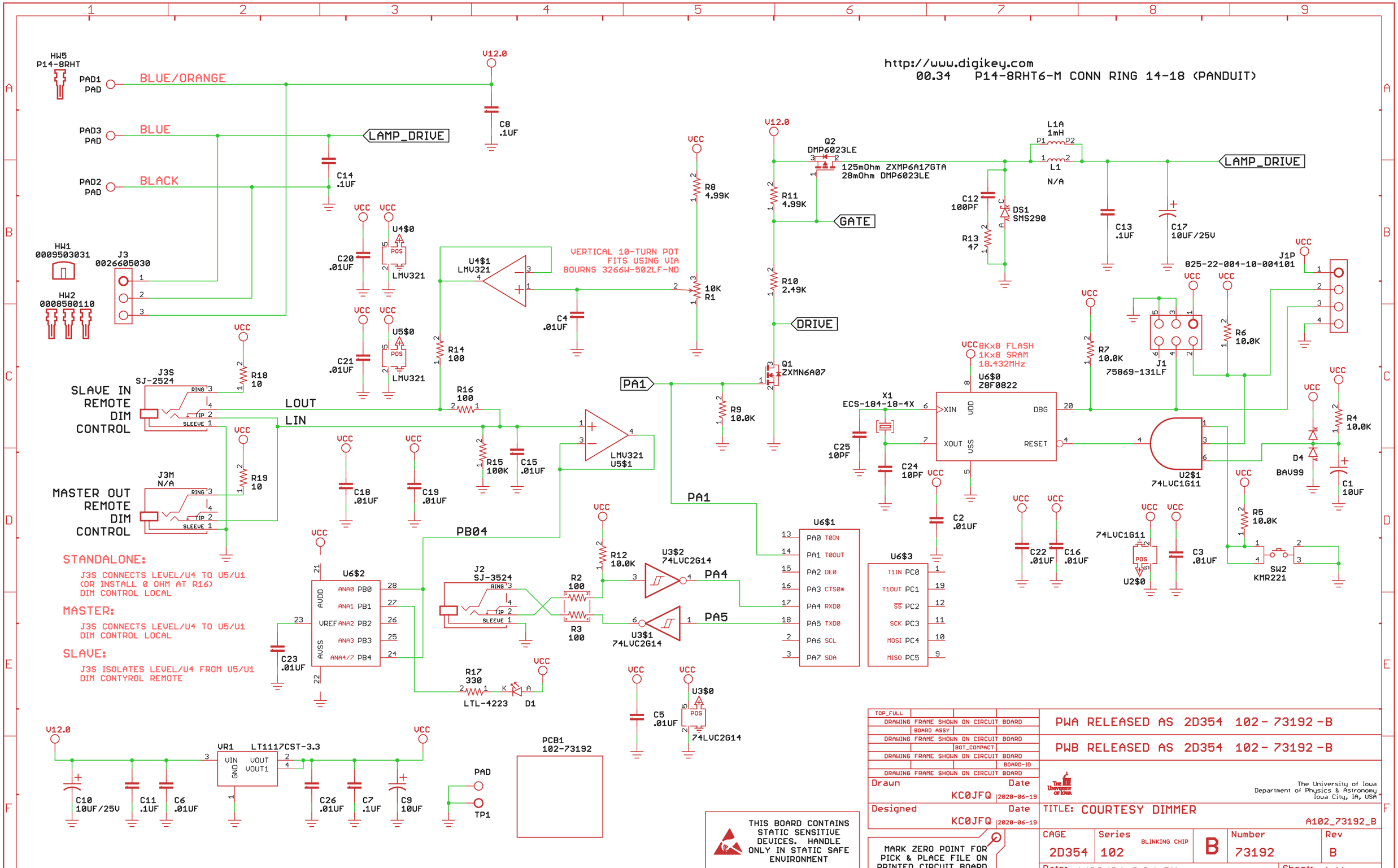

http://www.digikey.com
00.34 P14-8RHT6-M CONN RING 14-18 (PANDUIT)
HW5 P14-8RHT
PAD1 PAD
BLUE/ORANGE
PAD3 PAD
BLUE
PAD2 PAD
BLACK
LAMP_DRIVE
V12.0
C8 .1UF
C14 .1UF
HW1 0009503031
HW2 0008580110
J3 0026605030
C20 .01UF
C21 .01UF
U4$0 LMV321
U5$0 LMV321
U4$1 LMV321
VERTICAL 10-TURN POT FITS USING VIA BOURNS 3266W-502LF-ND
C4 .01UF
R8 4.99K
10K R1
R14 100
R16 100
R15 100K
C15 .01UF
LMV321 U5$1
R18 10
R19 10
J3S SJ-2524
SLAVE IN REMOTE DIM CONTROL
LOUT
LIN
J3M N/A
MASTER OUT REMOTE DIM CONTROL
C18 .01UF
C19 .01UF
PB04
PA1
R9 10.0K
Q1 ZXMN6A07
Q2 DMP6023LE
125mOhm ZXMP6A17GTA
28mOhm DMP6023LE
R11 4.99K
GATE
R10 2.49K
DRIVE
L1A 1mH
L1 N/A
C12 100PF
DS1 SMS290
R13 47
C13 .1UF
C17 10UF/25V
J1P 825-22-004-10-004101
R7 10.0K
R6 10.0K
J1 75869-131LF
8Kx8 FLASH
1Kx8 SRAM
18.432MHz
U6$0 Z8F0822
X1 ECS-184-18-4X
C25 10PF
C24 10PF
C2 .01UF
U2$1 74LVC1G11
D4 BAV99
R4 10.0K
C1 10UF
R5 10.0K
SW2 KMR221
C22 .01UF
C16 .01UF
74LVC1G11 U2$0
C3 .01UF
U6$1
U6$3
U6$2
J2 SJ-3524
R12 10.0K
R2 100
R3 100
U3$2 74LVC2G14
U3$1 74LVC2G14
PA4
PA5
C23 .01UF
R17 330
LTL-4223
D1
C5 .01UF
U3$0 74LVC2G14
STANDALONE:
J3S CONNECTS LEVEL/U4 TO U5/U1
(OR INSTALL 0 OHM AT R16)
DIM CONTROL LOCAL
MASTER:
J3S CONNECTS LEVEL/U4 TO U5/U1
DIM CONTROL LOCAL
SLAVE:
J3S ISOLATES LEVEL/U4 FROM U5/U1
DIM CONTYROL REMOTE
VR1 LT1117CST-3.3
C10 10UF/25V
C11 .1UF
C6 .01UF
C26 .01UF
C7 .1UF
C9 10UF
PCB1 102-73192
PAD
TP1
THIS BOARD CONTAINS STATIC SENSITIVE DEVICES. HANDLE ONLY IN STATIC SAFE ENVIRONMENT
MARK ZERO POINT FOR PICK & PLACE FILE ON PRINTED CIRCUIT BOARD
PWA RELEASED AS 2D354 102-73192-B
PWB RELEASED AS 2D354 102-73192-B
The University of Iowa
Department of Physics & Astronomy
Iowa City, IA, USA
Drawn KC0JFQ 2020-06-19
Designed KC0JFQ 2020-06-19
TITLE: COURTESY DIMMER
A102_73192_B
CAGE 2D354
Series 102 BLINKING CHIP
B
Number 73192
Rev B
Date: 4/20/24 8:06 PM
4/20/24 8:07 PM
Sheet: 1/1